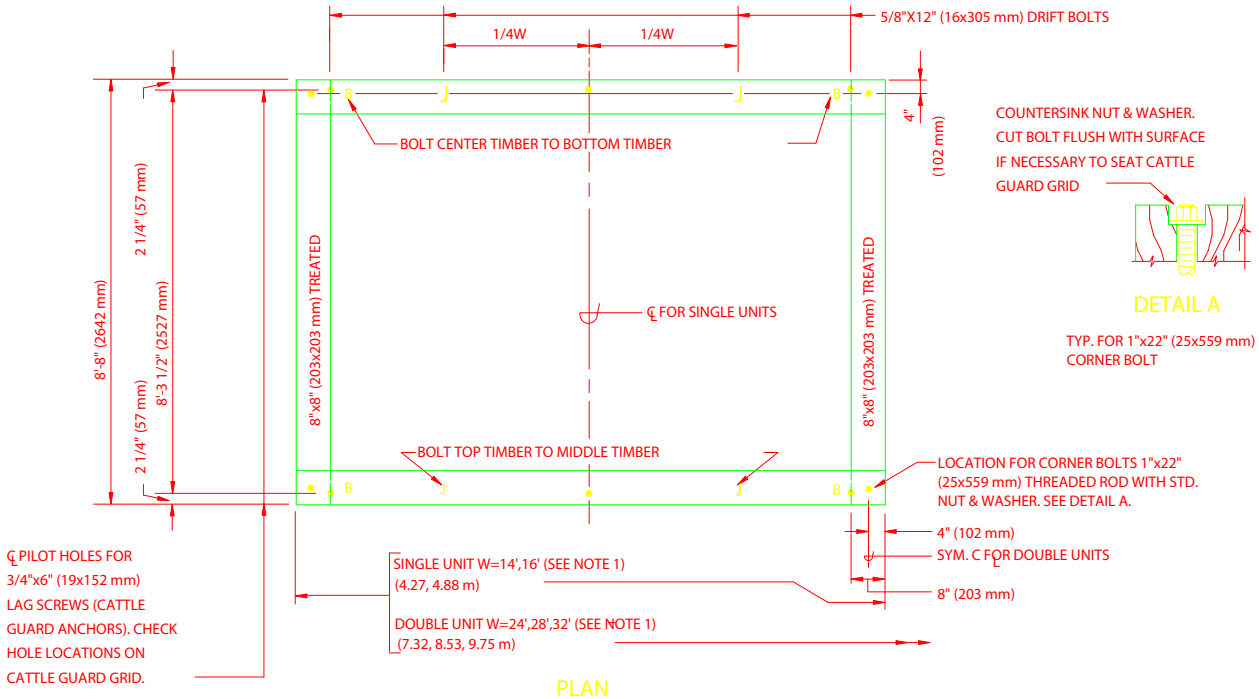

PLAN

WELDING SYMBOL LEGEND

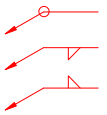

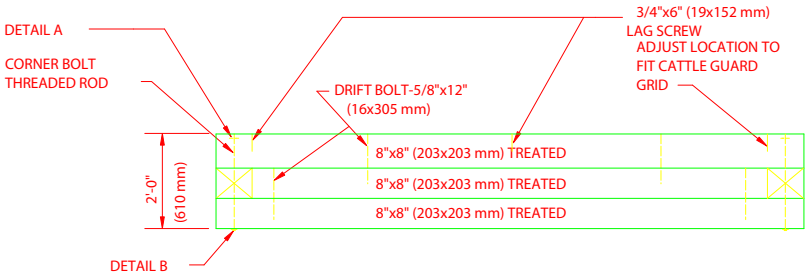

SIDE ELEVATION

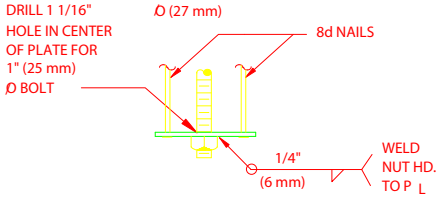

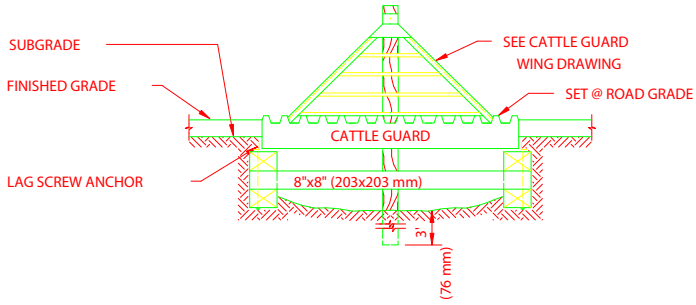

SECTION AT ROAD C L

(WITH GRID AND WINGS IN PLACE)

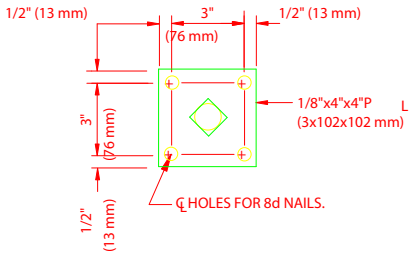

DETAIL B

TYP. FOR 1"x22" (25x559 mm) CORNER BOLT

NOTES:

1. SEE SPECIFICATIONS FOR WIDTH (W).

2. CATTLE GUARD ANCHOR ANGLES WITH 3/4"x 6" (19x152 mm) LAG SCREW WITH STANDARD WASHER TO BE FURNISHED WITH EACH SINGLE GRID.

3. ON EARTH-SURFACED ROADS, SET TOP OF CATTLE GUARD 8" (203 mm) ABOVE SUBGRADE UNLESS PLANS OR STAKES INDICATE ANOTHER ELEVATION. PAPER FILL BACK FROM CATTLE GUARD APPROX. 50' (15.24 m) IN BOTH DIRECTIONS.

4. DIMENSIONS FOR LUMBER ARE NOMINAL UNLESS OTHERWISE NOTED.

5. THE METRIC CONVERSIONS ARE PROVIDED IN PARENTHESIS FOLLOWING THE ENGLISH UNITS.