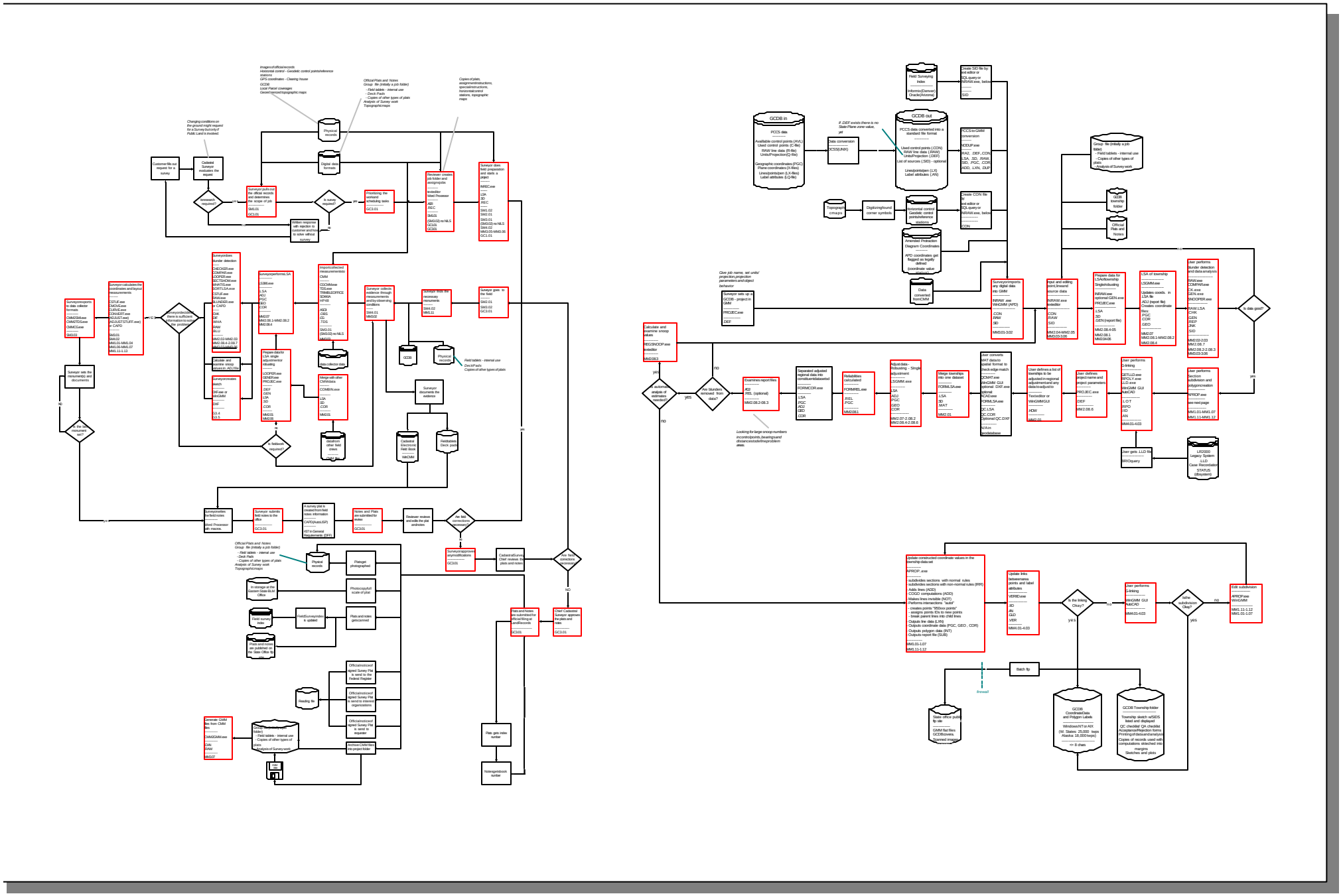Existing SM and MM Workflows