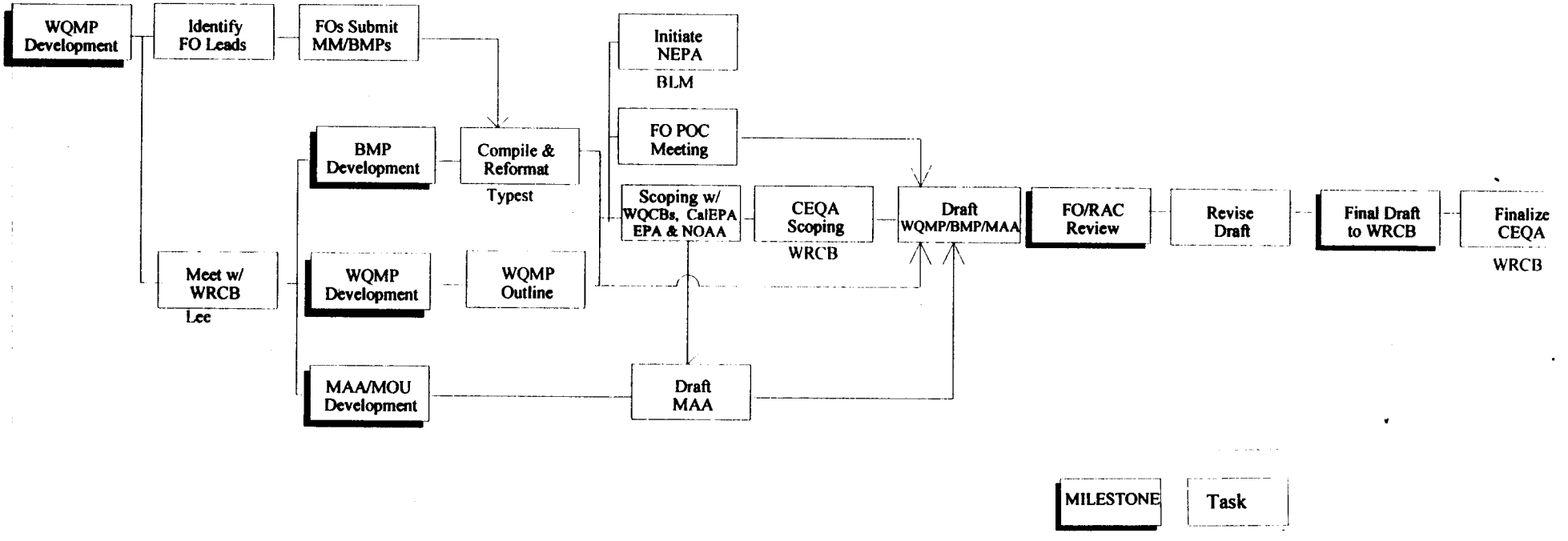Water Quality Management Plan with BMPs & MAA